MALE END VIEW	FEMALE END VIEW
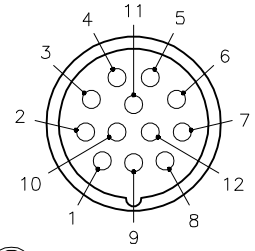	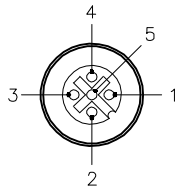
M23 connector	euro fast.

SPECIFICATIONS

HOUSING MATERIAL/COLOR	NYLON/BLACK
RECEPTACLE MATERIAL/PLATING	BRASS/NICKEL
CONTACT CARRIERS	NYLON
CONTACT CARRIER MATERIAL/PLATING	BRASS/GOLD
O-RING MATERIAL	NBR (P1), VITON (J1-J4)
OPERATING VOLTAGE	10-30 VDC
OPERATING CURRENT	4.0 AMPS/SIGNAL, 9.0 AMPS TOTAL
PROTECTION CLASS	IP67,IP69K; ONLY WHEN ALL RECEPTACLES ARE COVERED WITH PLUGS OR CONNECTED
OPERATING TEMPERATURE	-40°C to +85°C (-40°F to +185°F)

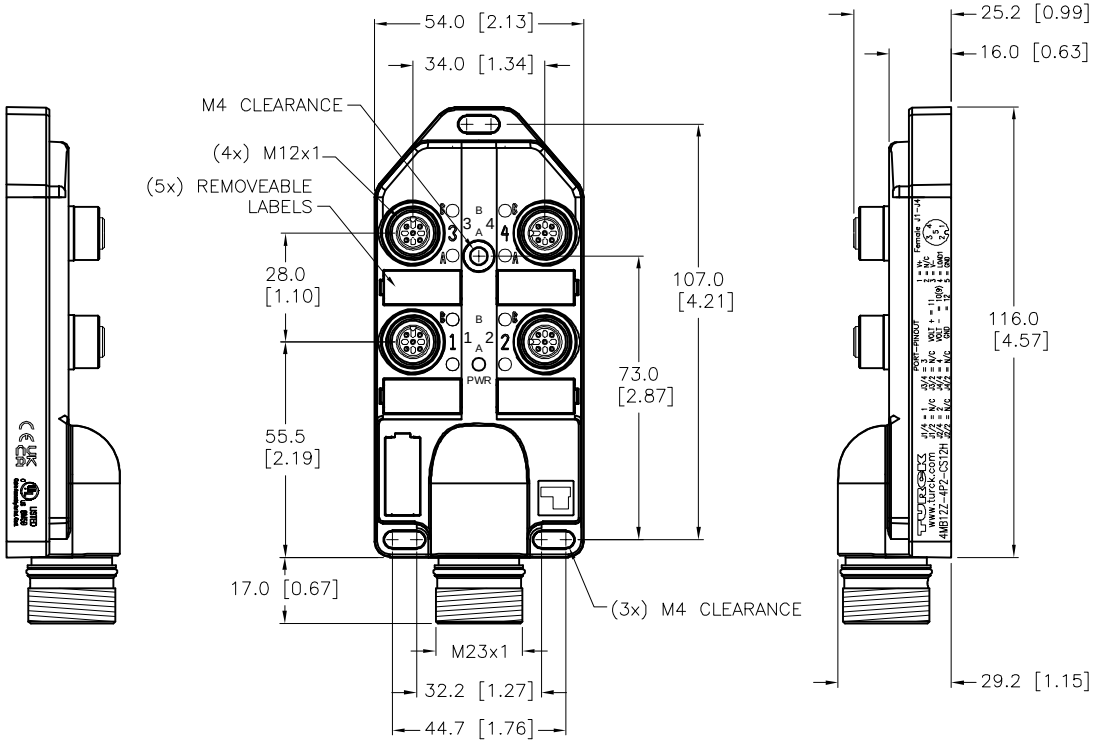

WIRING DIAGRAM

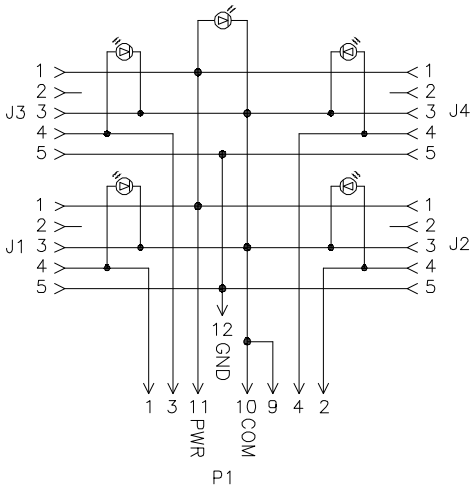

SOURCE DRAWING - FOR REFERENCE ONLY

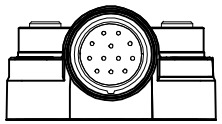

I	UPDATE LOGO	NF	09/09/22	500000006820
REV	DESCRIPTION	BY	DATE	ECO NO.

RELATED DOCUMENTS
1.
2.
3.
4.

3RD ANGLE PROJECTION

THIS DRAWING IS CONFIDENTIAL AND THE PROPERTY OF TURCK INC. USE OF THIS DOCUMENT WITHOUT WRITTEN PERMISSION IS PROHIBITED.

TURCK

3000 CAMPUS DRIVE
MINNEAPOLIS, MN 55441
1-800-544-7769
(763) 553-7300
(763) 553-0708 fax
www.turck.us

MATERIAL: SEE SPECIFICATIONS

FINISH: SEE SPECIFICATIONS

ALL DIMENSIONS DISPLAYED ON THIS DRAWING ARE FOR REFERENCE ONLY

CONTACT TURCK FOR MORE INFORMATION

DRFT: RDS | DATE: 11/24/04
APVD: SWC | SCALE: 1=2

UNIT OF MEASUREMENT
MILLIMETER [INCH]
DO NOT SCALE THIS DRAWING

DESCRIPTION: 4MB12Z-4P2-CS12H

IDENTIFICATION NO.: E8026488 | REV: |

FILE: E8026488 | SHEET 1 OF 1

Approved 09/13/2022, work order #257565 by I.K.